ASK ENGINEERS

ISO 6020/2 HYDRAULIC CYLINDERS

Compact tie rod cylinders for working pressure
Up to 160 bar

ENERGIZING FLUID SINCE 1994

Contact us at – askengineers1@gmail.com
8605795124
Address- SOHAM INDUSTRIAL COMPLEX, Shop no.6, Plot no.318, Sector 10, P.C.N.T.D.A, Pradhikaran, Bhosari, Pune-26
Website- www.askengineers.in

PRODUCT FEATURE

ASK ENGINEERS Cylinders as per ISO 6020/2: 2006 (E) are of compact design and suitable for working for pressure up to 160 bar with following constructional details:

Barrel- Made from cold drawn seamless tubes and honed to a surface finish of 0.4 micron and higher

Piston Rod- Made from medium carbon steel and hard chrome plated to a smooth finish

Gland- Phosphorous bronze bush inserted for smooth operation of piston rod and to provide sufficient guide to piston rod

End caps- Fine machined from steel, and constructed with a sturdy design to withstand high loads

Tie Rods- Made from high tensile steel rod and toughen to value of 28

Mountings- Various types of ISO mountings available according to the requirement

Cushioning- Provided with a needle valve and check valve for providing accurate damping action at the end of the stroke

Cushioning screw- For fine adjustment of cushioning

Air bleed- Screw provided for releasing the air trapped in cylinder

SEALING SYSTEM

Piston seal- Provided with one TURCON GLYDRING for low friction, Stick/Slip movement along with two TURCITE SLYDRING

Gland seal- Polyurethane RU3 U-CUP seal is used which has a primary and secondary lip for maximum flexibility

Wiper seal- Double acting Polyurethane scraper is used. This wear resistant seal has a lip which scrapes off the dirt and dust particle entering the system

Static seals- Nitrile rubber ‘O’ Rings are used for sealing of face of end caps and locking of piston and piston rods

HEAD RECTANGULAR FLANGE
ISO ME5

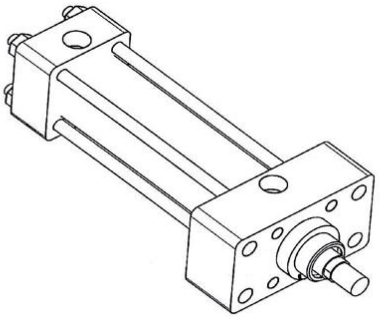

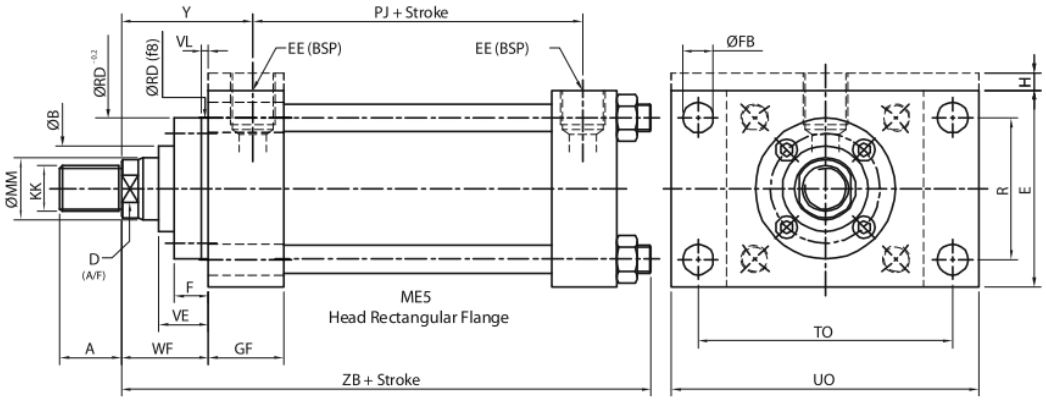

BORE	MM	KK	A	D	EE	H	Y	PJ	E	R	TO	UO	FB	GF	WF	B	RD	VE	F	VL	ZB
25	12	M10X1.25	14	9	1/4”	5	50	53	40	27	51	65	5.5	-	25	24	38	16	10	3	121
	18	M14X1.5	18	15												30	38				
32	16	M12X1.25	16	13	1/4”	5	60	56	45	33	58	70	6.6	-	35	26	42	22	10	3	137
	22	M16X1.5	22	18												34	42				
40	18	M14X1.5	18	15	3/8”	-	62	73	63	41	87	110	11	40	35	30	62	22	10	3	166
	28	M20X1.5	28	22												42	62				
50	22	M16X1.5	22	18	1/2”	-	67	74	75	52	105	130	14	42	41	34	74	25	16	4	176
	36	M27X2	36	30												50	74				
63	28	M20X1.5	28	22	1/2”	-	71	80	90	65	117	145	14	38	48	42	75	29	16	4	185
	45	M33X2	45	36												60	88				
80	36	M27X2	36	30	3/4"	-	77	93	115	83	149	180	18	44	51	50	82	29	20	4	212
	56	M42X2	56	46												72	105				
100	45	M33X2	45	36	3/4”	-	82	101	130	97	162	200	18	43	57	60	92	32	22	5	225
	70	M48X2	63	60												88	125				
125	56	M42X2	56	46	1”	-	86	117	165	126	208	250	22	47	57	72	105	32	22	5	260
	90	M64X3	85	80												108	150				
160	70	M48X2	63	60	1”	-	86	130	205	155	253	300	26	51	57	88	125	32	25	5	279
	110	M80X3	95	100												133	170				
200	90	M64X3	85	80	1-1/4”	-	98	165	245	190	300	360	33	64	57	108	150	32	25	5	336
	140	M100X3	112	120												163	210				

CAP RECTANGULAR FLANGE
ISO ME6

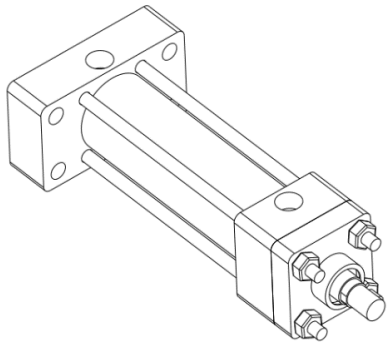

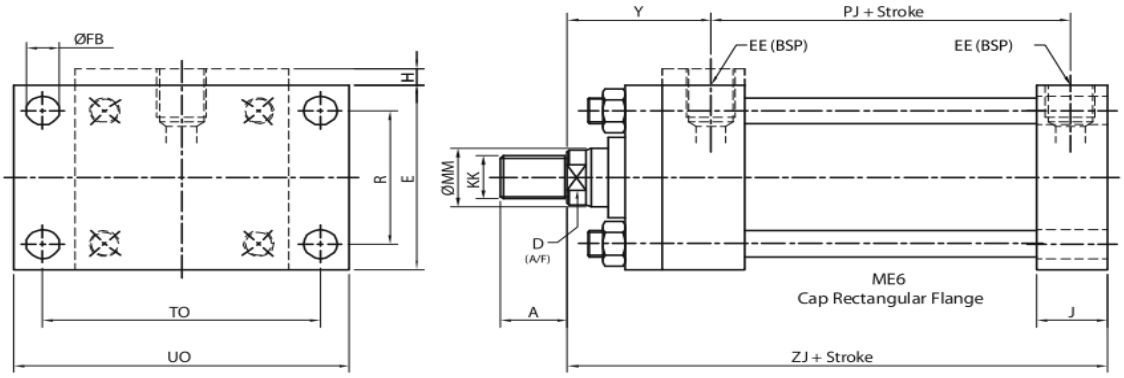

BORE	MM	KK	A	D	EE	H	Y	PJ	E	R	TO	UO	FB	J	ZJ
25	12	M10X1.25	14	9	1/4”	5	50	53	40	27	51	65	5.5	-	114
	18	M14X1.5	18	15											
32	16	M12X1.25	16	13	1/4”	5	60	56	45	33	58	70	6.6	-	128
	22	M16X1.5	22	18											
40	18	M14X1.5	18	15	3/8”	-	62	73	63	41	87	110	11	31	153
	28	M20X1.5	28	22											
50	22	M16X1.5	22	18	1/2”	-	67	74	75	52	105	130	14	32	159
	36	M27X2	36	30											
63	28	M20X1.5	28	22	1/2”	-	71	80	90	65	117	145	14	34	168
	45	M33X2	45	36											
80	36	M27X2	36	30	3/4"	-	77	93	115	83	149	180	18	38	190
	56	M42X2	56	46											
100	45	M33X2	45	36	3/4”	-	82	101	130	97	162	200	18	38	203
	70	M48X2	63	60											
125	56	M42X2	56	46	1”	-	86	117	165	126	208	250	22	38	232
	90	M64X3	85	80											
160	70	M48X2	63	60	1”	-	86	130	205	155	253	300	26	51	245
	110	M80X3	95	100											
200	90	M64X3	85	80	1-1/4”	-	98	165	245	190	300	360	33	53	299
	140	M100X3	112	120											

Cap fixed clevis
MP1

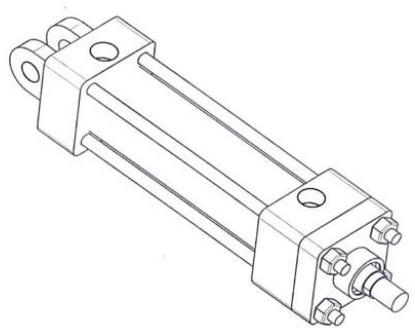

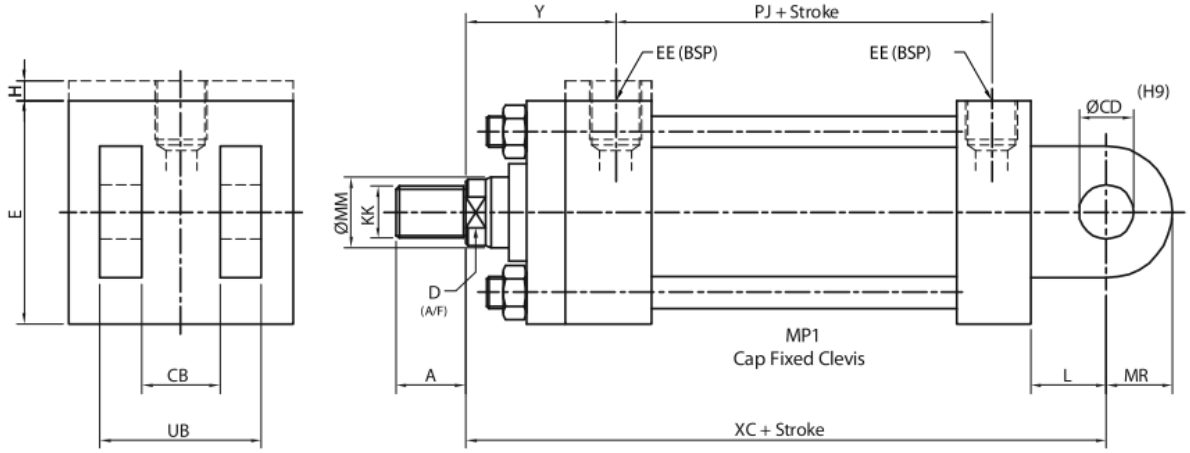

BORE	MM	KK	A	D	EE	H	Y	PJ	E	L	MR	CD	CB	UB	XC
25	12	M10X1.25	14	9	1/4”	5	50	53	40	13	12	10	12	25	127
	18	M14X1.5	18	15											
32	16	M12X1.25	16	13	1/4”	5	60	56	45	19	17	12	16	34	147
	22	M16X1.5	22	18											
40	18	M14X1.5	18	15	3/8”	-	62	73	63	19	17	14	40	42	172
	28	M20X1.5	28	22											
50	22	M16X1.5	22	18	1/2”	-	67	74	75	32	29	20	30	62	191
	36	M27X2	36	30											
63	28	M20X1.5	28	22	1/2”	-	71	80	90	32	29	20	30	62	200
	45	M33X2	45	36											
80	36	M27X2	36	30	3/4"	-	77	93	115	39	34	28	40	83	229
	56	M42X2	56	46											
100	45	M33X2	45	36	3/4”	-	82	101	130	54	50	36	50	103	257
	70	M48X2	63	60											
125	56	M42X2	56	46	1”	-	86	117	165	57	53	45	60	123	289
	90	M64X3	85	80											
160	70	M48X2	63	60	1”	-	86	130	205	63	59	56	70	143	308
	110	M80X3	95	100											
200	90	M64X3	85	80	1-1/4”	-	98	165	245	82	78	70	80	163	381
	140	M100X3	112	120											

CAP FIXED PLAIN EYE

MP3

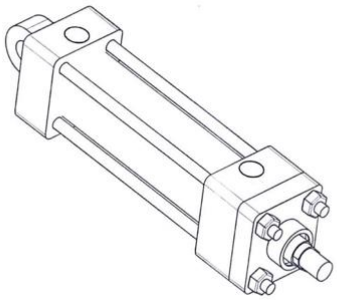

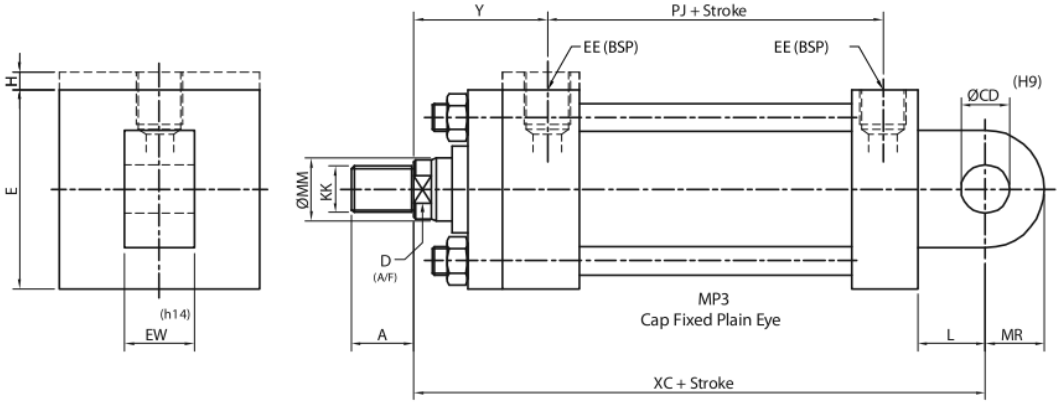

BORE	MM	KK	A	D	EE	H	Y	PJ	E	L	MR	CD	EW	XC
25	12	M10X1.25	14	9	1/4”	5	50	53	40	13	12	10	12	127
	18	M14X1.5	18	15										
32	16	M12X1.25	16	13	1/4”	5	60	56	45	19	17	12	16	147
	22	M16X1.5	22	18										
40	18	M14X1.5	18	15	3/8”	-	62	73	63	19	17	14	20	172
	28	M20X1.5	28	22										
50	22	M16X1.5	22	18	1/2”	-	67	74	75	32	29	20	30	191
	36	M27X2	36	30										
63	28	M20X1.5	28	22	1/2”	-	71	80	90	32	29	20	30	200
	45	M33X2	45	36										
80	36	M27X2	36	30	3/4"	-	77	93	115	39	34	28	40	229
	56	M42X2	56	46										
100	45	M33X2	45	36	3/4”	-	82	101	130	54	50	36	50	257
	70	M48X2	63	60										
125	56	M42X2	56	46	1”	-	86	117	165	57	53	45	60	289
	90	M64X3	85	80										
160	70	M48X2	63	60	1”	-	86	130	205	63	59	56	70	308
	110	M80X3	95	100										
200	90	M64X3	85	80	1-1/4”	-	98	165	245	82	78	70	80	381
	140	M100X3	112	120										

SIDE LUG
MS2

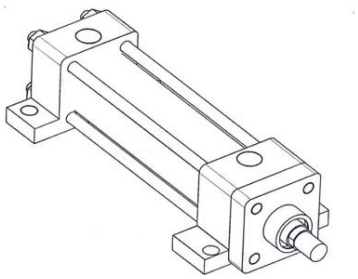

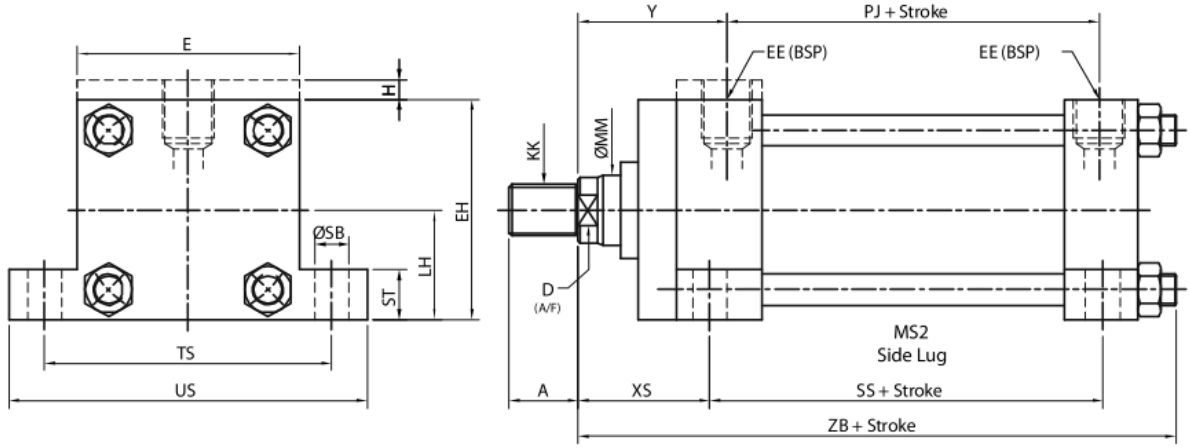

BORE	MM	KK	A	D	EE	H	Y	PJ	E	EH	LH	ST	TS	US	SB	XS	SS	ZB
25	12	M10X1.25	14	9	1/4”	5	50	53	40	39	19	8.5	54	72	6.6	33	72	121
	18	M14X1.5	18	15														
32	16	M12X1.25	16	13	1/4”	5	60	56	45	44.5	22	12.5	63	84	9	45	72	137
	22	M16X1.5	22	18														
40	18	M14X1.5	18	15	3/8”	-	62	73	63	62.5	31	12.5	83	103	11	45	97	166
	28	M20X1.5	28	22														
50	22	M16X1.5	22	18	1/2”	-	67	74	75	74.5	37	19	102	127	14	54	91	176
	36	M27X2	36	30														
63	28	M20X1.5	28	22	1/2”	-	71	80	90	89	44	26	124	161	18	65	85	185
	45	M33X2	45	36														
80	36	M27X2	36	30	3/4"	-	77	93	115	114.5	57	26	149	186	18	68	104	212
	56	M42X2	56	46														
100	45	M33X2	45	36	3/4”	-	82	101	130	128	63	32	172	216	26	79	101	225
	70	M48X2	63	60														
125	56	M42X2	56	46	1”	-	86	117	165	164.5	82	32	210	254	26	79	130	260
	90	M64X3	85	80														
160	70	M48X2	63	60	1”	-	86	130	205	203.5	101	38	260	318	33	86	129	279
	110	M80X3	95	100														
200	90	M64X3	85	80	1-1/4”	-	98	165	245	244.5	122	44	311	381	39	92	171	336
	140	M100X3	112	120														

HEAD INTEGRAL TRUNION
MT1

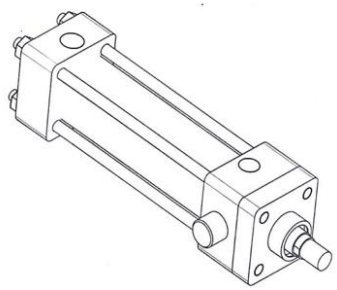

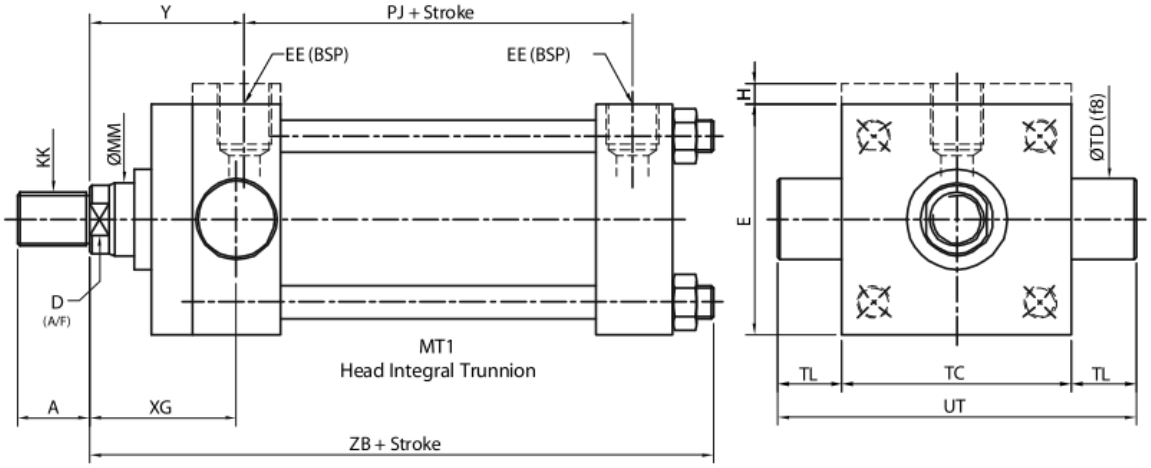

BORE	MM	KK	A	D	EE	H	Y	PJ	E	TC	UT	TD	TL	XG	ZB
25	12	M10X1.25	14	9	1/4”	5	50	53	40	38	58	12	10	44	121
	18	M14X1.5	18	15											
32	16	M12X1.25	16	13	1/4”	5	60	56	45	44	68	16	12	54	137
	22	M16X1.5	22	18											
40	18	M14X1.5	18	15	3/8”	-	62	73	63	63	95	20	16	57	166
	28	M20X1.5	28	22											
50	22	M16X1.5	22	18	1/2”	-	67	74	75	76	116	25	20	64	176
	36	M27X2	36	30											
63	28	M20X1.5	28	22	1/2”	-	71	80	90	89	139	32	25	70	185
	45	M33X2	45	36											
80	36	M27X2	36	30	3/4"	-	77	93	115	114	178	40	32	76	212
	56	M42X2	56	46											
100	45	M33X2	45	36	3/4”	-	82	101	130	127	207	50	40	71	225
	70	M48X2	63	60											
125	56	M42X2	56	46	1”	-	86	117	165	165	265	63	50	75	260
	90	M64X3	85	80											
160	70	M48X2	63	60	1”	-	86	130	205	203	329	80	63	75	279
	110	M80X3	95	100											
200	90	M64X3	85	80	1-1/4”	-	98	165	245	241	401	100	80	85	336
	140	M100X3	112	120											

CAP INTEGRAL TRUNION
MT2

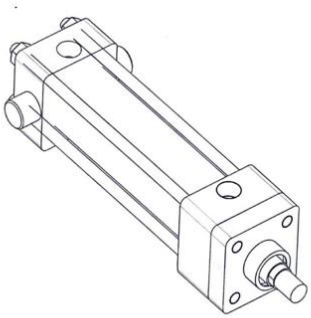

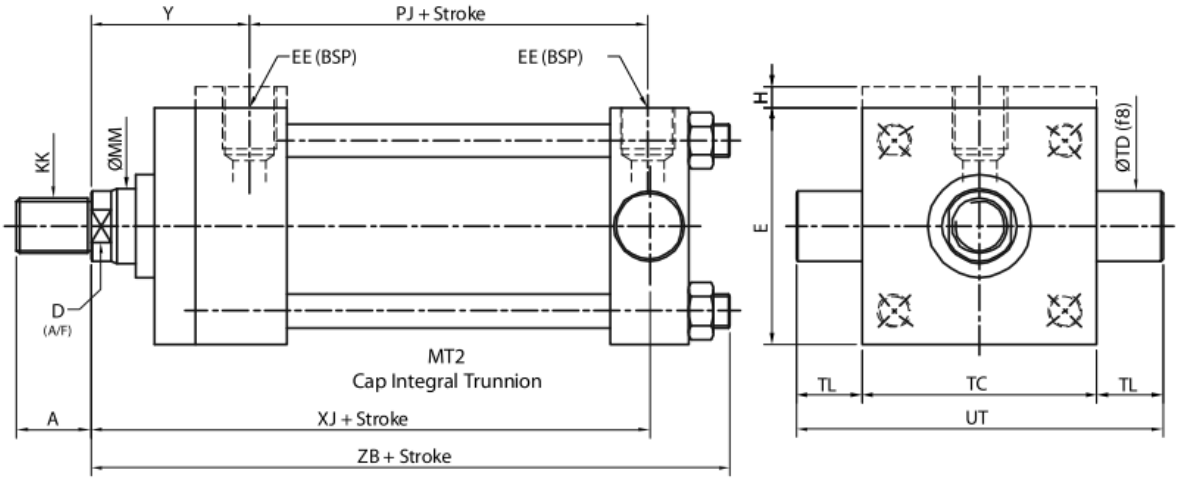

BORE	MM	KK	A	D	EE	H	Y	PJ	E	TC	UT	TD	TL	XJ	ZB
25	12	M10X1.25	14	9	1/4”	5	50	53	40	38	58	12	10	101	121
	18	M14X1.5	18	15											
32	16	M12X1.25	16	13	1/4”	5	60	56	45	44	68	16	12	115	137
	22	M16X1.5	22	18											
40	18	M14X1.5	18	15	3/8”	-	62	73	63	63	95	20	16	134	166
	28	M20X1.5	28	22											
50	22	M16X1.5	22	18	1/2”	-	67	74	75	76	116	25	20	140	176
	36	M27X2	36	30											
63	28	M20X1.5	28	22	1/2”	-	71	80	90	89	139	32	25	149	185
	45	M33X2	45	36											
80	36	M27X2	36	30	3/4"	-	77	93	115	114	178	40	32	168	212
	56	M42X2	56	46											
100	45	M33X2	45	36	3/4”	-	82	101	130	127	207	50	40	187	225
	70	M48X2	63	60											
125	56	M42X2	56	46	1”	-	86	117	165	165	265	63	50	209	260
	90	M64X3	85	80											
160	70	M48X2	63	60	1”	-	86	130	205	203	329	80	63	230	279
	110	M80X3	95	100											
200	90	M64X3	85	80	1-1/4”	-	98	165	245	241	401	100	80	276	336
	140	M100X3	112	120											

INTERMEDIATE TRUNION
MT4

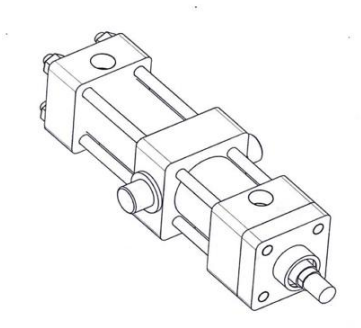

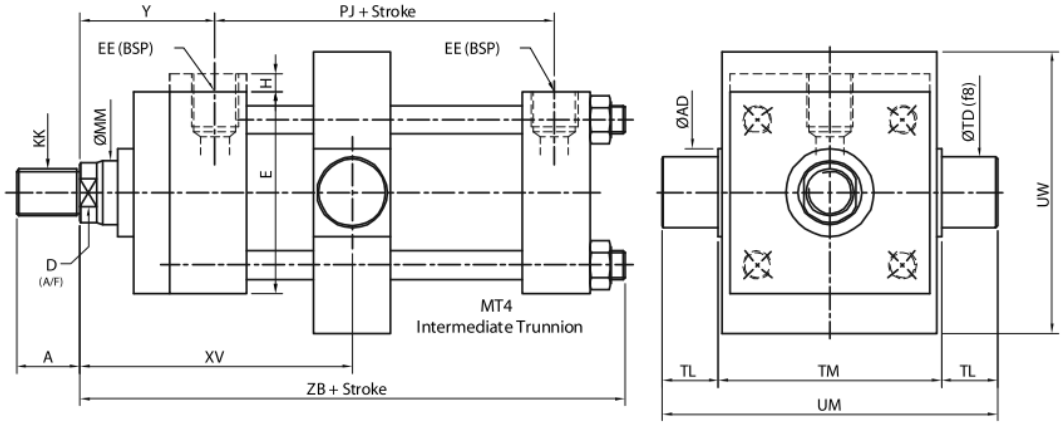

BORE	MM	KK	A	D	EE	H	Y	PJ	E	TM	UM	TD	TL	AD	UW	XV	ZV
25	12	M10X1.25	14	9	1/4”	5	50	53	40	48	68	12	10	20	63	**T**	121
	18	M14X1.5	18	15													
32	16	M12X1.25	16	13	1/4”	5	60	56	45	55	79	16	12	25	75	**0**	137
	22	M16X1.5	22	18													
40	18	M14X1.5	18	15	3/8”	-	62	73	63	76	108	20	16	30	92		166
	28	M20X1.5	28	22													
50	22	M16X1.5	22	18	1/2”	-	67	74	75	89	129	25	20	40	112	**S**	176
	36	M27X2	36	30													
63	28	M20X1.5	28	22	1/2”	-	71	80	90	100	150	32	25	40	126	**P**	185
	45	M33X2	45	36													
80	36	M27X2	36	30	3/4"	-	77	93	115	127	191	40	32	50	160	**E**	212
	56	M42X2	56	46													
100	45	M33X2	45	36	3/4”	-	82	101	130	140	220	50	40	60	180	**C**	225
	70	M48X2	63	60													
125	56	M42X2	56	46	1”	-	86	117	165	178	278	63	50	73	215	**I**	260
	90	M64X3	85	80													
160	70	M48X2	63	60	1”	-	86	130	205	215	341	80	63	90	260	**F**	279
	110	M80X3	95	100													
200	90	M64X3	85	80	1-1/4”	-	98	165	245	279	439	100	80	110	355	**Y**	336
	140	M100X3	112	120													

CAP TIE ROD EXTENDED
MX2

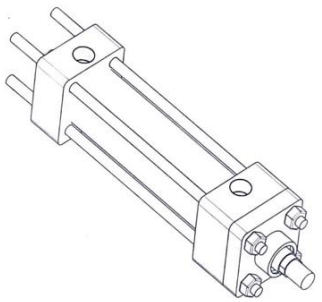

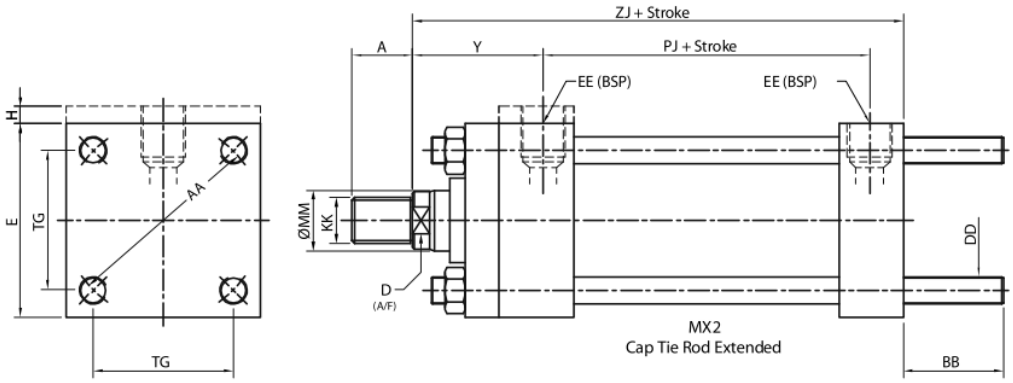

BORE	MM	KK	A	D	EE	H	Y	PJ	E	TG	AA	DD	BB	ZJ
25	12	M10X1.25	14	9	1/4”	5	50	53	40	28.3	40	M5X0.8	19	114
	18	M14X1.5	18	15										
32	16	M12X1.25	16	13	1/4”	5	60	56	45	33.2	47	M6X1	24	128
	22	M16X1.5	22	18										
40	18	M14X1.5	18	15	3/8”	-	62	73	63	41.7	59	M8X1	35	153
	28	M20X1.5	28	22										
50	22	M16X1.5	22	18	1/2”	-	67	74	75	52.3	74	M12X1.2	46	159
	36	M27X2	36	30								5		
63	28	M20X1.5	28	22	1/2”	-	71	80	90	64.3	91	M12X1.2	46	168
	45	M33X2	45	36								5		
80	36	M27X2	36	30	3/4"	-	77	93	115	82.7	117	M16X1.5	59	190
	56	M42X2	56	46										
100	45	M33X2	45	36	3/4”	-	82	101	130	96.9	137	M16X1.5	59	203
	70	M48X2	63	60										
125	56	M42X2	56	46	1”	-	86	117	165	125.9	178	M22X1.5	81	232
	90	M64X3	85	80										
160	70	M48X2	63	60	1”	-	86	130	205	154.9	219	M27X2	92	245
	110	M80X3	95	100										
200	90	M64X3	85	80	1-1/4”	-	98	165	245	190.2	269	M30X2	115	299
	140	M100X3	112	120										

Head Tie Rod Extended
MX3

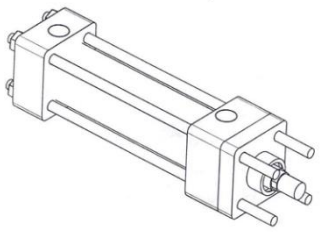

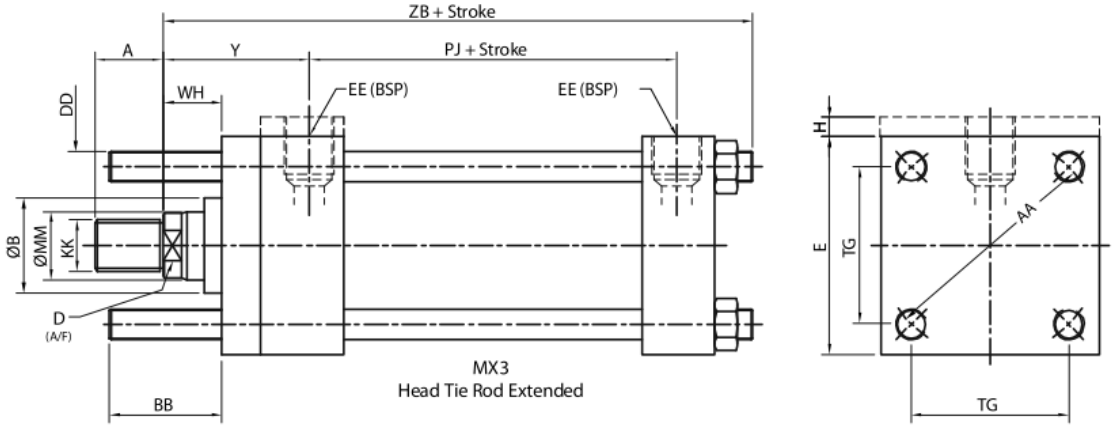

BORE	MM	KK	A	D	EE	H	Y	PJ	E	TG	AA	DD	BB	ZB	B	WH
25	12	M10X1.25	14	9	1/4”	5	50	53	40	28.3	40	M5X0.8	19	121	24	15
	18	M14X1.5	18	15											30	
32	16	M12X1.25	16	13	1/4”	5	60	56	45	33.2	47	M6X1	24	137	26	25
	22	M16X1.5	22	18											34	
40	18	M14X1.5	18	15	3/8”	-	62	73	63	41.7	59	M8X1	35	166	30	25
	28	M20X1.5	28	22											42	
50	22	M16X1.5	22	18	1/2”	-	67	74	75	52.3	74	M12X1.25	46	176	34	25
	36	M27X2	36	30											50	
63	28	M20X1.5	28	22	1/2”	-	71	80	90	64.3	91	M12X1.25	46	185	42	32
	45	M33X2	45	36											60	
80	36	M27X2	36	30	3/4"	-	77	93	115	82.7	117	M16X1.5	59	212	50	31
	56	M42X2	56	46											72	
100	45	M33X2	45	36	3/4”	-	82	101	130	96.9	137	M16X1.5	59	225	60	35
	70	M48X2	63	60											88	
125	56	M42X2	56	46	1”	-	86	117	165	125.9	178	M22X1.5	81	260	72	35
	90	M64X3	85	80											108	
160	70	M48X2	63	60	1”	-	86	130	205	154.9	219	M27X2	92	279	88	32
	110	M80X3	95	100											133	
200	90	M64X3	85	80	1-1/4”	-	98	165	245	190.2	269	M30X2	115	336	108	32
	140	M100X3	112	120											163	

ORDERING DETAILS

Follow the following format while ordering-

ASK-160HTRC	CYLINDER BORE	PISTON ROD DIA.	STROKE	MOUNTING STYLE	CUSHIONING

CUSHIONING

CB= CUSHIONING AT BOTH ENDS

NC= NON CUSHIONED

CC= CAP END CUSHIONING

CH= HEAD END CUSHIONING

MOUNTING STYLES

ME5- HEAD RECTANGULAR FLANGE

ME6- CAP RECTANGULAR FLANGE

MP1- CAP FIXED CLEVIS

MP3- CAP FIXED PLAIN EYE

MS2- SIDE LUGS

MT1- HEAD INTEGRAL TRUNION

MT2- CAP INTEGRAL TRUNION

MT4- INTERMEDIATE TRUNION

MX2- CAP TIE ROD EXTENDED

MX3- HEAD TIE ROD EXTENDED